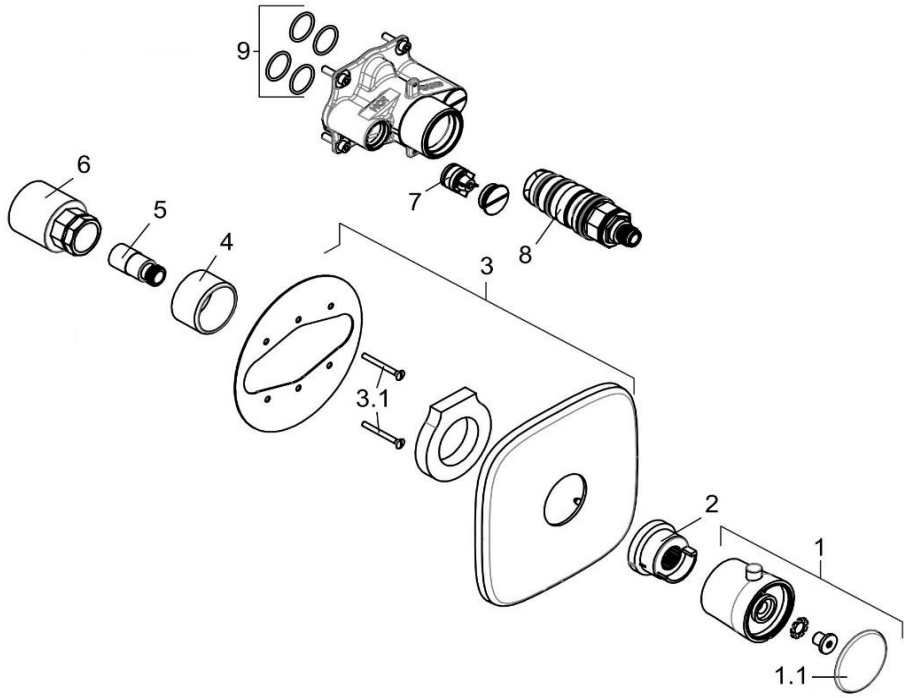

537290575		Unterputz-Thermostatarmatur	concealed thermostatic mixer
1	7300205-00	THERMOSTATGRIFF	HANDLE FOR THERMOSTAT
1.1	7445505-00	ABDECKKAPPE	COVER CAP
2	93071506-00	JUSTIERBUCHSE	SLEEVE FOR ADJUSTMENT
3	7309905-00	UP - ROSETTE	ESCUTCHEON, CONCEALED
3.1	92273135-00	SCHRAUBEN SET	SCREW SET
4	92012205-00	HÜLSE	SLEEVE
5	92050637-00	SPINDELKUPPLUNG	EXTENSION FOR SPINDLE
6	92056205-00	KOPFSTÜCKVERLÄNGERUNG	EXTENSION FOR HEAD PIECE
7	7479700-00	RÜCKFLUSSVERHINDERER	BACK FLOW PREVENTER
8	7310800-00	THERMOSTAT	TEMPERATURE CONTROL UNIT
9	7301100-00	DICHTUNGSSATZ	SEALING SET