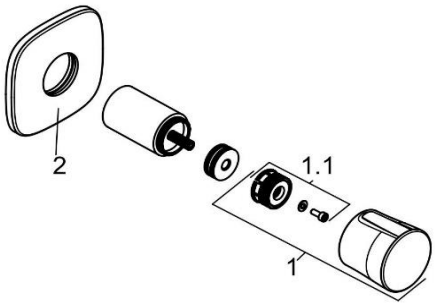

538150575		Unterputzventil	concealed valve
1	7309205-00	GRIFF BALANCE	HANDLE BALANCE
1.1	7472300-00	RASTBUCHSE	HOLD BUSHING
2	7307805-00	UP - ROSETTE	ESCUTCHEON, CONCEALED