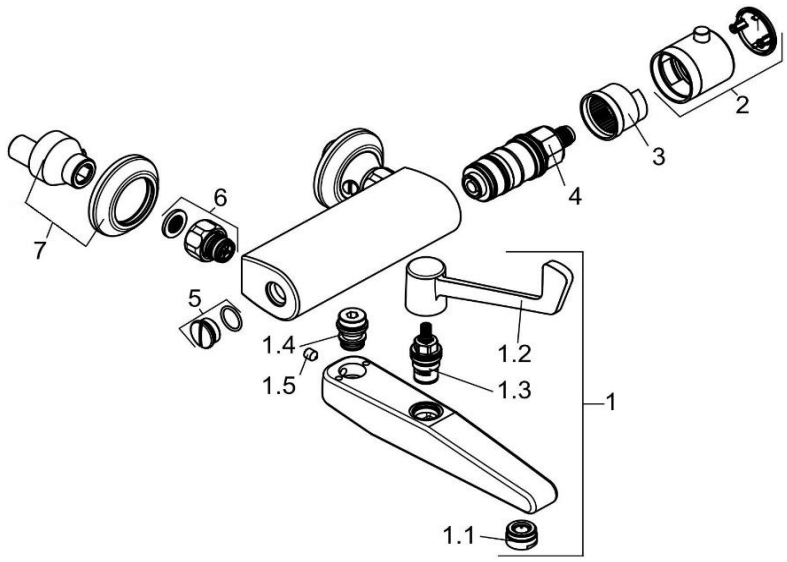

ab 11/1999

350850564		Thermostat-Klinikarmatur DN 15	thermostatic hospital mixer DN 15
1	7644705-00	AUSLAUF	SPOUT
1.1	7601805-00	STRAHLREGLER	AERATOR
1.2	7563805-00	HEBEL MEDI CARE	LEVER MEDI- CARE
1.3	7505400-00	KERAMIK - OBERTEIL	CERAMIC HEAD PART
1.4	7564805-00	BRAUSEANSCHLUSS	SHOWER CONNECTING
1.5	92223200-00	GEWINDESTIFT	GRUB SCREW
2	7637505-00	THERMOSTATGRIFF	HANDLE FOR THERMOSTAT
3	93029411A-00	JUSTIERBUCHSE	SLEEVE FOR ADJUSTMENT
4	7526300-00	THERMOSTAT	TEMPERATURE CONTROL UNIT
5	7533100-00	VERSCHLUSSMUTTER	SCREW PLUG
6	7562505-00	WANDARMATURENANSCHLUSS	WALL CONNECTING NIPPLE
7	7589505-00	S - ANSCHLUSS	S - CONNECTIONS

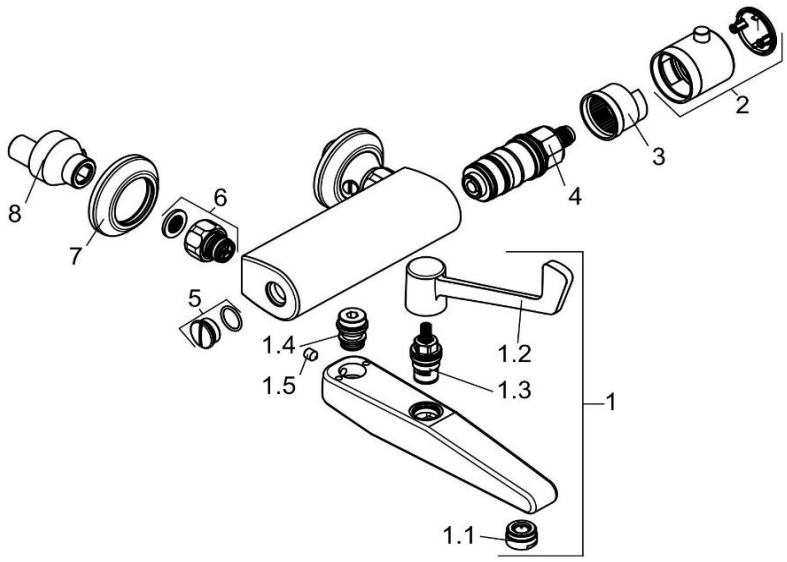

bis 10/1999

350850564		Thermostat-Klinikarmatur DN 15	thermostatic hospital mixer DN 15
1	7526705-00	AUSLAUF	SPOUT
1.1	7601805-00	STRAHLREGLER	AERATOR
1.2	7563805-00	HEBEL MEDI CARE	LEVER MEDI- CARE
1.3	7505400-00	KERAMIK - OBERTEIL	CERAMIC HEAD PART
1.4	7564805-00	BRAUSEANSCHLUSS	SHOWER CONNECTING
1.5	92215335-00	GEWINDESTIFT	GRUB SCREW
2	7526205-00	THERMOSTATGRIFF	HANDLE FOR THERMOSTAT
3	93007906-00	JUSTIERBUCHSE	SLEEVE FOR ADJUSTMENT
4	7526300-00	THERMOSTAT	TEMPERATURE CONTROL UNIT
5	7533100-00	VERSCHLUSSMUTTER	SCREW PLUG
6	7562505-00	WANDARMATURENANSCHLUSS	WALL CONNECTING NIPPLE
7	7519505-00	ROSETTE	ESCUTCHEON
8	7527605-00	S - ANSCHLUSS	S - CONNECTIONS