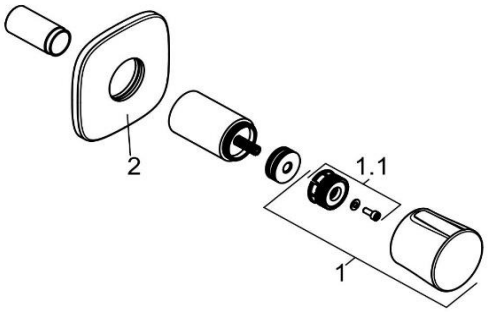

538470575		Zwei-Wege-Umstellung	two-way diverter
1	7309205-00	GRIFF	HANDLE
1.1	7472300-00	RASTBUCHSE	HOLD BUSHING
2	7322605-00	UP - ROSETTE	ESCUTCHEON, CONCEALED