KLUDI LOGO

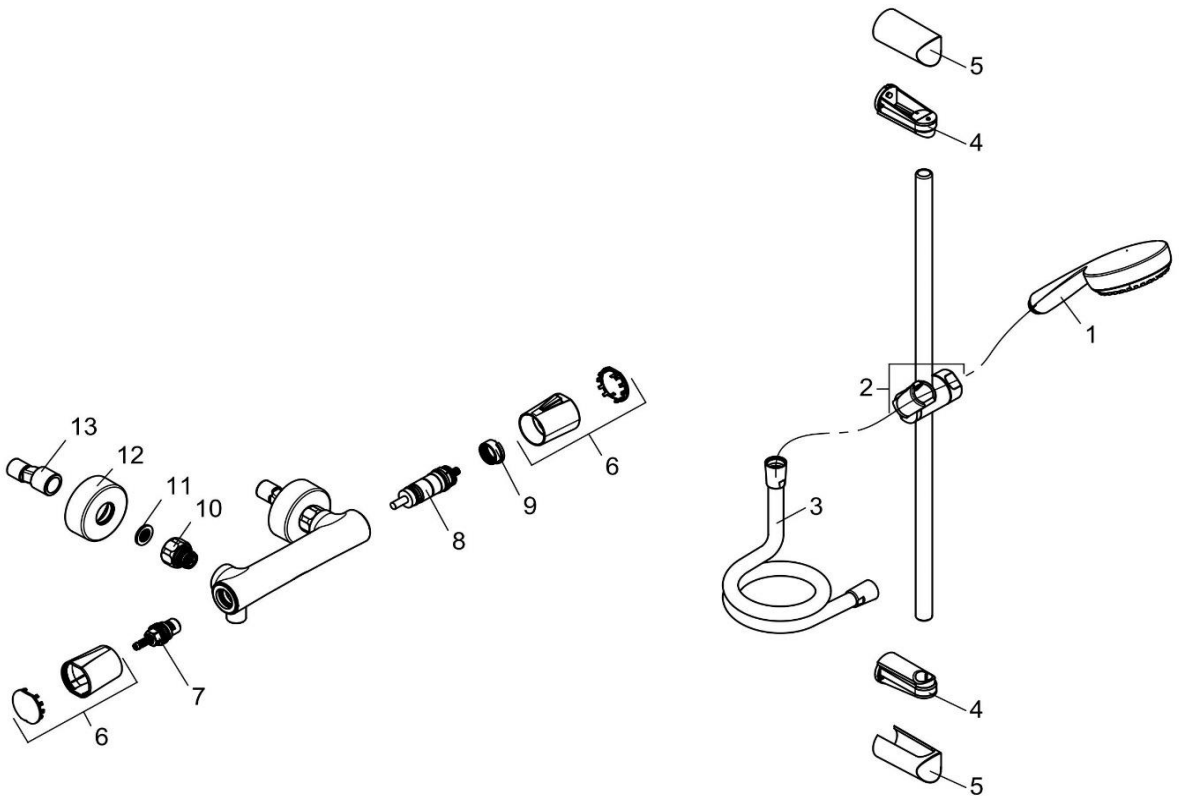

6857705-00		Shower Duo	Shower Duo
1	6830005-00	HANDBRAUSE	HANDSHOWER
2	7858605-00	GLEITSCHIEBER	GILDER
3	6105605-00	BRAUSESCHLAUCH	SHOWER HOSE
4	93026043-00	WANDHALTER	WALLHOOK
5	93079705-00	GEHÄUSE	BODY
6	7454805-00	GRIFF - SET	HANDLE SET
7	7505400-00	KERAMIK - OBERTEIL	CERAMIC HEAD PART
8	7447000-00	THERMOSTAT	TEMPERATURE CONTROL UNIT
9	93080659-00	JUSTIERBUCHSE	SLEEVE FOR ADJUSTMENT
10	7451305-00	WANDARMATURENANSCHLUSS	WALL CONNECTING NIPPLE
11	95502535-00	SCHMUTZFANGSIEB F. THERMOSTAT	FILTER FOR THERMOSTAT MIXER
12	7469805-00	ROSETTE	ESCUTCHEON
13	7655204-00	S - ANSCHLUSS	S - CONNECTIONS

KLUDI
WATER IN PERFECTION