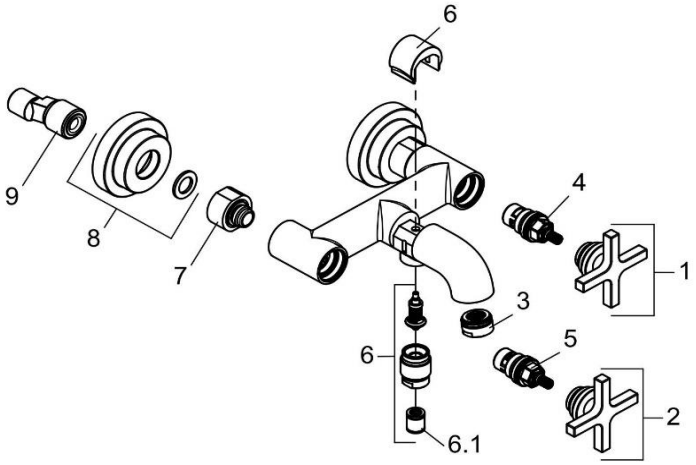

205400520		Wannenfüll-und Brausearmatur DN 15	bath- and shower mixer DN 15
1	7379705-00	GRIFF BLAU - NOVA FONTE	HANDLE BLUE - NOVA FONTE
2	7379805-00	GRIFF ROT - NOVA FONTE	HANDLE RED - NOVA FONTE
3	7457305-00	STRAHLREGLER	AERATOR
4	7383200-00	KERAMIK - OBERTEIL	CERAMIC HEAD PART
5	7371900-00	KERAMIK - OBERTEIL	CERAMIC HEAD PART
6	7380105-00	UMSTELLUNG	DIVERTER
6.1	7510600-00	RÜCKFLUSSVERHINDERER	BACK FLOW PREVENTER
7	7380405-00	WANDARMATURENANSCHLUSS	WALL CONNECTING NIPPLE
8	7380305-00	ROSETTE	ESCUTCHEON
9	7655100-00	S - ANSCHLUSS	S - CONNECTIONS