Milwaukee®

Nothing but **HEAVY DUTY.**®

M18 FOPH-EA

The illustration shows the application head M18FOPH-EA connected to the Milwaukee powerbase M18FOPH-0. This application head may only be operated in connection with the powerbase shown here.
Depending on the equipment package you have purchased various application heads. Other application heads and powerbases can be purchased separately.

For the following instructions of the powerbase in connection with this application head please refer to the separate instructions for the power base

- connecting the application head with the powerbase
- switching on-off
- speed selection
- change battery

Adjusting depth of cut

1

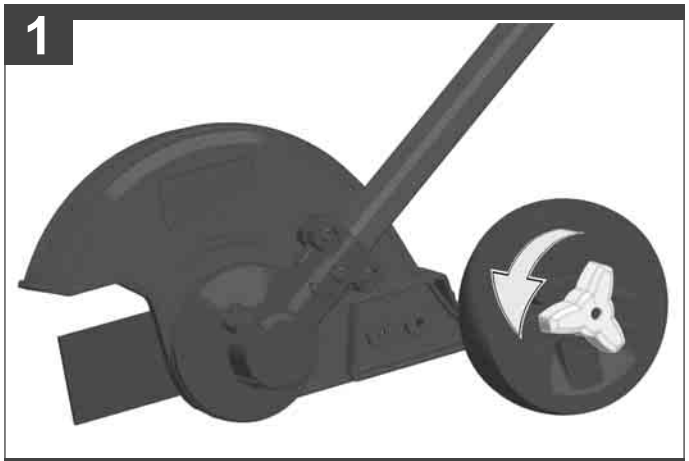

2

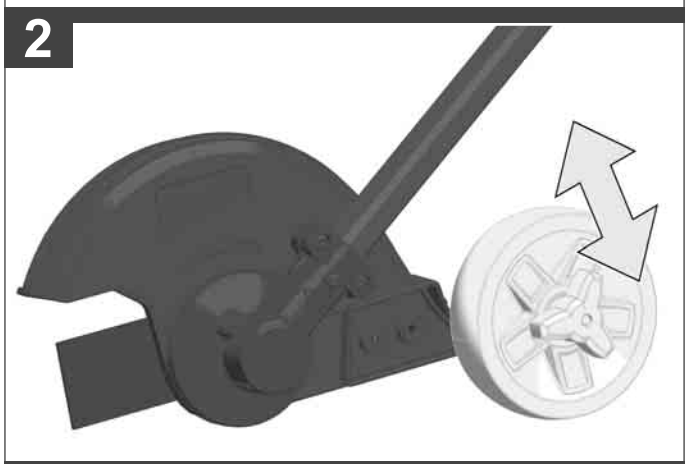

3

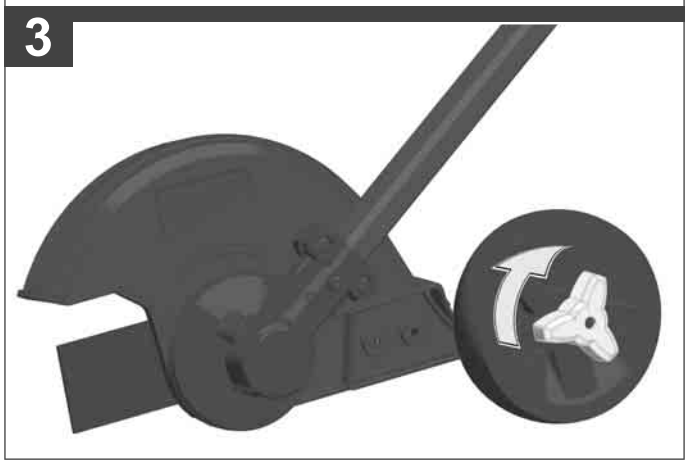

TIP

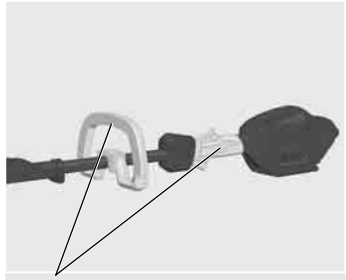

Handle (insulated gripping surface)

1

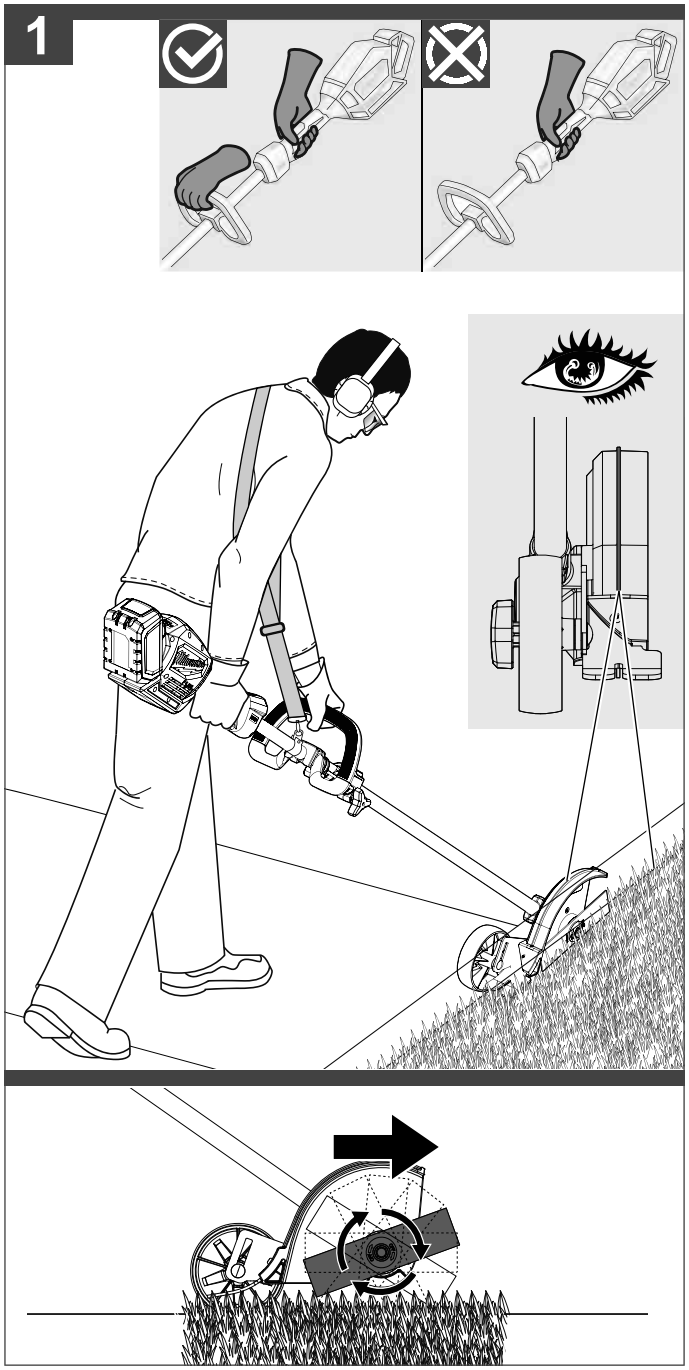

1

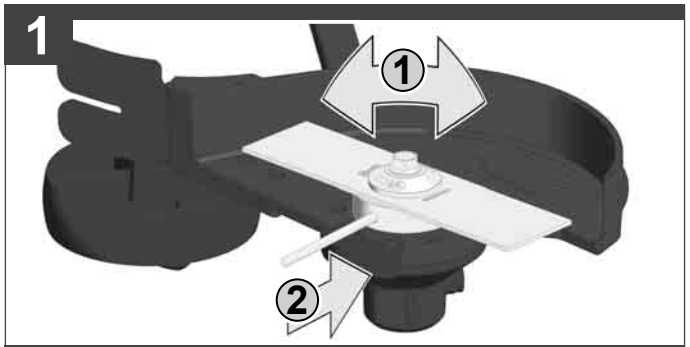

2

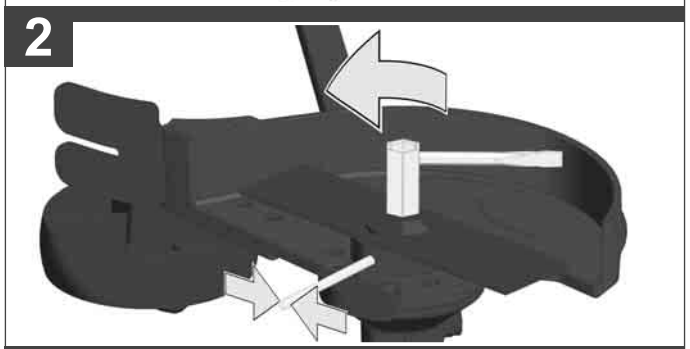

3

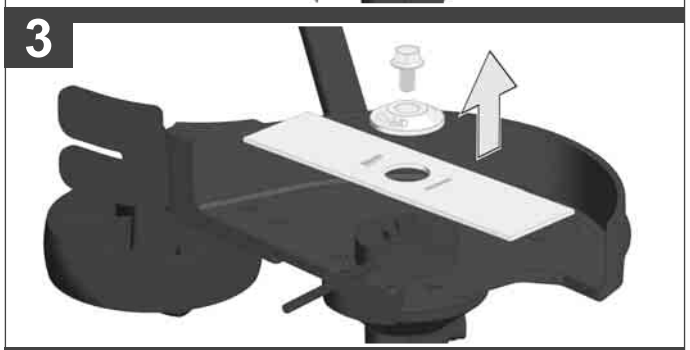

4

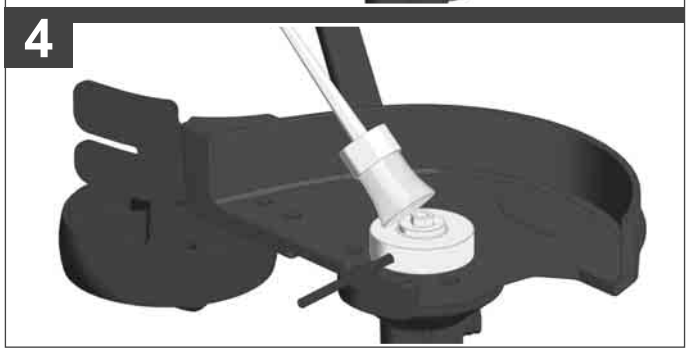

5

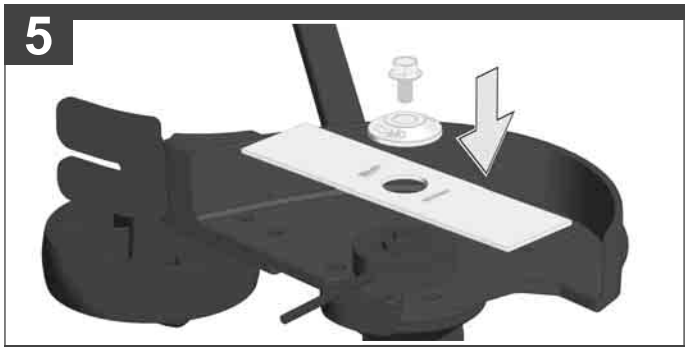

6

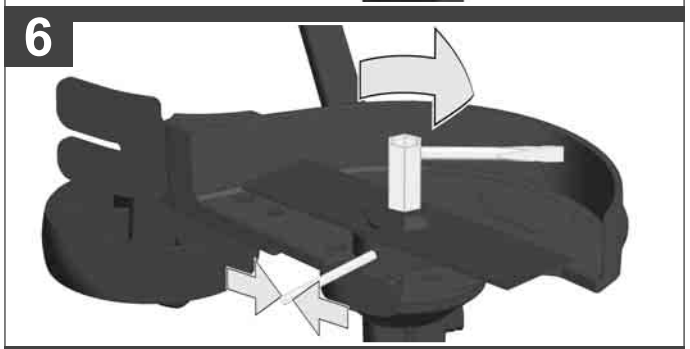

7

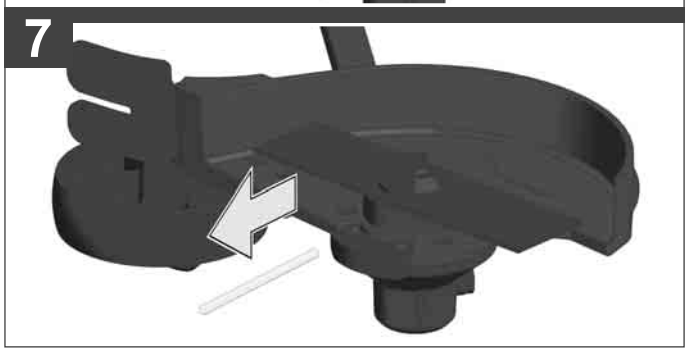

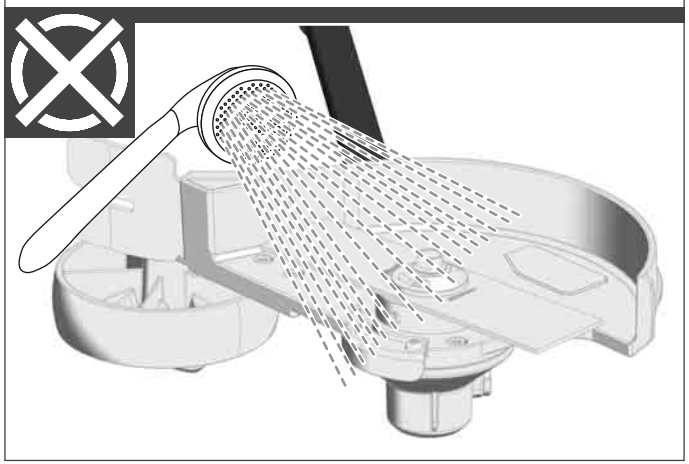

1

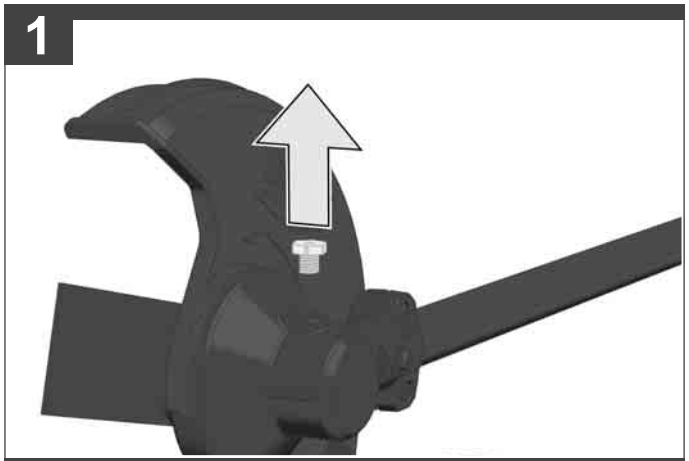

2

3

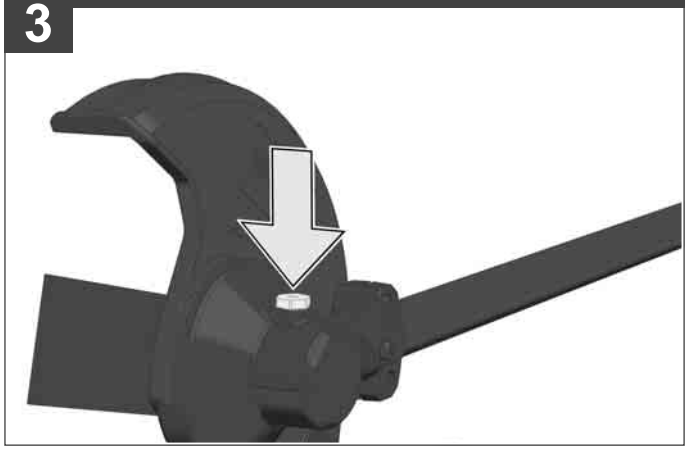

TECHNICAL DATA CORDLESS EDGER M18 FOPH-EA

Production code	4697 71 02... ...000001-999999
No-load speed, low speed	0-3000 min^{-1}
No-load speed, high speed	0-3900 min^{-1}
Blade diameter	203 mm
Cutting capacity max.	50 mm
Battery voltage	18 V
Weight according EPTA-Procedure 01/2014 (9.0 Ah)	2,4 kg

Noise/vibration information
Measured values determined according to EN ISO 3744.
Typically, the A-weighted noise levels of the tool are:

Sound pressure level (Uncertainty K=3dB(A))	94 dB(A)
Sound power level (Uncertainty K=3dB(A))	5 dB(A)

Wear ear protectors!

Total vibration values (vector sum in the three axes) determined according to EN ISO 3744.

Vibration a_h	4,0 m/s^2
Uncertainty K=	0,9 m/s^2

For technical data and approvals of application heads for use on various powerbases please refer to the operating instructions of the used application head.

WARNING

The vibration emission level given in this information sheet has been measured in accordance with a standardised test given in EN ISO 3744 / ISO 7574-4 and may be used to compare one tool with another. It may be used for a preliminary assessment of exposure.

The declared vibration emission level represents the main applications of the tool. However if the tool is used for different applications, with different accessories or poorly maintained, the vibration emission may differ. This may significantly increase the exposure level over the total working period.

An estimation of the level of exposure to vibration should also take into account the times when the tool is switched off or when it is running but not actually doing the job. This may significantly reduce the exposure level over the total working period.

Identify additional safety measures to protect the operator from the effects of vibration such as: maintain the tool and the accessories, keep the hands warm, organisation of work patterns.

⚠ WARNING Read these instructions carefully, be familiar with the controls and the proper use of the machine. Save all warnings and instructions for future reference.

EDGER SAFETY WARNINGS

Training

Read the instructions carefully. Be familiar with the controls and the proper use of the equipment.

Never allow children or people unfamiliar with these instructions to use the edger. Local regulations may restrict the age of the operator.

Never edge while people, especially children, or pets are nearby.

Keep in mind that the operator or user is responsible for accidents or hazards occurring to other people or their property.

Preparation

While edging, always wear eye and ear protection, substantial foot wear, and long trousers.

Thoroughly inspect the surface where the equipment is to be used and remove all stones, sticks, wires, bones and other foreign objects.

Before using, always visually inspect to see that the blades, blade bolts and cutter assembly are not worn or damaged. Replace worn or damaged blades and bolts in stets to preserve balance.

Use only manufacturer-recommended replacement parts and accessories.

Operation

Do not operate the engine in a confined space where dangerous carbon monoxide fumes can collect. Breathing exhaust fumes can be fatal.

Edge only in daylight or in good artificial light.

Always be sure of your footing on slopes.

Walk, never run.

Use extreme caution when reversing or pulling the edger toward you.

Make sure the blade has stopped before crossing surfaces other than grass and when transporting the edger to and from the area to be edged.

Never operate the edger with defective, missing or incorrectly fitted guards.

Do not change the engine governor settings or overspeed the engine.

Start the engine or switch on the motor carefully according to instructions and with feet well away from the blade(s).

Do not tilt when starting the engine or switching on the motor, unless the edger has to be tilted for starting. In this case, do not tilt it more than absolutely necessary and lift only the part which is away from the operator.

Do not start the engine when a bystander is standing in front of the blade(s).

Do not put hands or feet near or under rotating parts.

Always switch off the electric motor and disconnect from main or stop the fuel powered engine:

- before cleaning blockages;
- before checking, cleaning or working on the blade(s);
- after striking a foreign object: inspect the blade(s) for damage and make repairs before restarting and operating the edger;
- if edger starts to vibrate abormally (check immediately).
- Stop the engine whenever you leave the edger.

Maintenance and storage

Keep all nuts, bolts and screws tight to be sure the equipment is in safe working conditions.

Allow the engine to cool before storing in any enclosure.

Replace worn or damaged parts.

Do not attempt to repair the machine unless you are competent to do so.

Use only manufacturer-recommended replacement parts and accessories.

ADDITIONAL SAFETY INSTRUCTIONS

Never allow children, persons with reduced physical, sensory or mental capabilities or lack of experience and knowledge or people unfamiliar with these instructions to use the machine, local regulations may restrict the age of the operator.

Remove the battery pack before starting any work on the machine.

Do not dispose of used battery packs in the household refuse or by burning them. Milwaukee Distributors offer to retrieve old batteries to protect our environment.

Do not store the battery pack together with metal objects (short circuit risk).

Use only System M18 chargers for charging System M18 battery packs. Do not use battery packs from other systems.

Battery acid may leak from damaged batteries under extreme load or extreme temperatures. In case of contact with battery acid wash it off immediately with soap and water. In case of eye contact rinse thoroughly for at least 10 minutes and immediately seek medical attention.

RESIDUAL RISK

Even when the product is used as prescribed, it is still impossible to completely eliminate certain residual risk factors. The following hazards may arise in use and the operator should pay special attention to avoid the following:

Injury caused by vibration
Hold the product by designated handles and restrict working time and exposure.

Exposure to noise can cause hearing injury
Wear ear protection and limit exposure.

Injury due to flying debris
Wear eye protection, heavy long trousers, gloves and substancial footwear at all times.

SPECIFIED CONDITIONS OF USE

The product is only intended for use outdoors by a standing operator.

The product is designed for edging along hard surfaces, such as sidewalks, driveways, flower beds, curbs, and similar areas.

Do not use the tool on or near gravel surfaces.

The cutting plane should be approximately parallel to the ground surface when trimming.

The product should not be used to cut or trim hedges, bushes, or other vegetation where the cutting plane is not at or about ground surface level.

Do not use this product in any other way as stated for normal use.

EC-DECLARATION OF CONFORMITY

We declare as the manufacturer under our sole responsibility that the product described under “Technical Data” fulfills all the relevant regulations and the directives 2011/65/EU (RoHS), 2014/30/EU, 2006/42/EC, 2000/14/EC and the following harmonized standards have been used:

EN 60745-1:2009+A11:2010
ISO 11789:1999
EN 55014-1:2017+A11:2020
EN 55014-2:2015
EN IEC 63000:2018

Measured sound power level: 86,7 dB(A)
Guaranteed sound power level: 96 dB(A).

Conformity assessment procedure according 2000/14/EC to Annex VI.
DEKRA Certification B.V.
Meander 1051 / P.O. Box 5185
6825 MJ ARNHEM / 6802 ED ARNHEM
Country : Netherlands
Notified Body number : 0344

Winnenden, 2021-04-26

Alexander Krug
Managing Director

CE

Authorized to compile the technical file.

Techtronic Industries GmbH
Max-Eyth-Straße 10
71364 Winnenden
Germany

GB-DECLARATION OF CONFORMITY

We declare as the manufacturer under our sole responsibility that the product described under “Technical Data” fulfills all the relevant provisions of the following Regulations S.I. 2008/1597 (as amended), S.I. 2016/1091 (as amended), S.I. 2012/3032 (as amended), S.I.2001/1701 (as amended) and that the following designated standards have been used:

BS EN 60745-1:2009+A11:2010
ISO 11789:1999
BS EN 55014-1:2017+A11:2020
BS EN 55014-2:2015
BS EN IEC 63000:2018

Measured sound power level: 86,7 dB(A)
Guaranteed sound power level: 96 dB(A).

Conformity assessment procedure according to S.I.2001/1701 Schedule 9
Intertek Testing & Certification Ltd.
Academy Place, 1-9 Brook Street
Brentwood, Essex, CM14 5NQ
Country : United Kingdom
Notified Body number: 0359

Winnenden, 2021-04-26

Alexander Krug
Managing Director

Authorized to compile the technical file.

Techtronic Industries GmbH
Max-Eyth-Straße 10
71364 Winnenden
Germany

OPERATION

Avoid edging in wet soil/grass. The blade guard may clog and cause unexpected results. If the blade guard becomes clogged, stop the tool, remove the battery pack, and clean debris from the blade guard.

Grasp the tool firmly with your right hand on the rear handle and your left hand on the front handle. Always stand behind the guard. Hold the tool in a comfortable position with the rear handle about hip height.

Slide the tool along the surface, taking care to avoid contact with hard objects. Use the blade ridge to align the blade with the edging surface.

Push the tool at a steady pace. If the blade begins to bog down, slow the cutting pace. Do not force the blade into the ground.

BATTERIES

Battery packs which have not been used for some time should be recharged before use.

Temperatures in excess of 50°C (122°F) reduce the performance of the battery pack. Avoid extended exposure to heat or sunshine (risk of overheating).

The contacts of chargers and battery packs must be kept clean.

For an optimum life-time, the battery packs have to be fully charged, after used.

To obtain the longest possible battery life remove the battery pack from the charger once it is fully charged.

For battery pack storage longer than 30 days:
Store the battery pack where the temperature is below 27°C and away from moisture
Store the battery packs in a 30% - 50% charged condition
Every six months of storage, charge the pack as normal.

BATTERY PACK PROTECTION LI-ION BATTERY

The battery pack has overload protection that protects it from being overloaded and helps to ensure long life.
Under extreme stress the battery electronics switch off the machine automatically. To restart, switch the machine off and then on again. If the machine does not start up again, the battery pack may have discharged completely. In this case it must be recharged in the battery charger.

TRANSPORTING LITHIUM BATTERIES

Lithium-ion batteries are subject to the Dangerous Goods Legislation requirements.

Transportation of those batteries has to be done in accordance with local, national and international provisions and regulations.

- The user can transport the batteries by road without further requirements.
- Commercial transport of Lithium-Ion batteries by third parties is subject to Dangerous Goods regulations. Transport preparation and transport are exclusively to be carried out by appropriately trained persons and the process has to be accompanied by corresponding experts.

When transporting batteries:

- Ensure that battery contact terminals are protected and insulated to prevent short circuit.
- Ensure that battery pack is secured against movement within packaging.
- Do not transport batteries that are cracked or leak.

Check with forwarding company for further advice

MAINTENANCE

The ventilation slots of the machine must be kept clear at all times.

Servicing requires extreme care and knowledge and should be performed only by a qualifi ed service technician. For service, we suggest you return the product to your nearest authorised service center for repair. When servicing, use only identical replacement parts.

Switch off and remove battery pack before conducting any maintenance or cleaning work.

You may make adjustments and repairs described here. For other repairs, contact the authorised service agent.

For replacement line, use only nylon filament line of the diameter described in the specification table of this manual.

After extending new cutter line, always return the product to its normal operating position before starting.

After each use, clean the product with a soft dry cloth. Any part that is damaged should be properly repaired or replaced by an authorised service centre.

Check all nuts, bolts, and screws at frequent intervals for proper tightness to ensure the product is in safe working condition.

Use only Milwaukee accessories and Milwaukee spare parts. Should components need to be replaced which have not been described, please contact one of our Milwaukee service agents (see our list of guarantee/service addresses).

If needed, an exploded view of the tool can be ordered. Please state the machine type printed as well as the six-digit No. on the label and order the drawing at your local service agents or directly at: Techtronic Industries GmbH, Max-Eyth-Straße 10, 71364 Winnenden, Germany.

SYMBOLS

	CAUTION! WARNING! DANGER!
	Please read the instructions carefully before starting the machine.
	Remove the battery pack before starting any work on the machine.
	Wear ear protectors! Always wear goggles when using the machine.
	Wear gloves!
	Always wear protective clothing and footwear.
minimum 15m	Keep bystanders a safe distance away from the machine.
	Rotating cutting blade
	Thrown objects
	Direction of edger blade rotation
	Do not use in the rain or leave outdoors while it is raining.
	DANGER! Avoid blade contact during use.
LWA 96 dB	The guaranteed sound power level shown on this label is 96 dB(A).
	Do not dispose electric tools, batteries/ rechargeable batteries together with household waste material. Electric tools and batteries that have reached the end of their life must be collected separately and returned to an environmentally compatible recycling facility. Check with your local authority or retailer for recycling advice and collection point.
n_0	Stroke rate under no-load
V	Volts
⎓	Direct current
CE	European Conformity Mark
UK CA	British Confomity Mark
001	Ukraine Conformity Mark
EAC	EurAsian Conformity Mark

Copyright 2021

Techtronic Industries GmbH
Max-Eyth-Str. 10
71364 Winnenden
Germany

+49 (0) 7195-12-0

www.milwaukeetool.eu

Techtronic Industries (UK) Ltd
Fieldhouse Lane
Marlow Bucks SL7 1HZ
UK

(06.21)
4100 4701 81